INGY-MOD3MDALI

Passive Infra Red (PIR) Occupancy Detector & Photocell Module

Input: 12Vdc SELV

PLEASE READ THESE INSTRUCTIONS BEFORE INSTALLING THE PRODUCT
NOTE: This product is only compatible to work with INGY enabled equipment.

This INGY-MOD3MDALI module is designed for building into luminaires to control DALI ballasts using it's internal DALI power supply (10mA max.) Configurable via the free to download INGY APP on Google Play or Apple APP Store.

INSTALLATION

To be installed by a competent person with reference to BS 7671 or equivalent local standards. If in doubt consult a qualified electrician.

- A mounting bezel is supplied to assist manufacturers to mount the INGY-MOD3MDALI control unit into a luminaire housing.
- The INGY-MOD3MDALI control unit snap fits into the mounting bezel.
- The 12VDC (800mA max.) SELV Power Supply (not supplied) for the INGY-MOD3MDALI device should be connected as shown in diagram 2:

  0V Power in (0V).
  12V Power in (12V).
  Dim/DA + Dimming control out. (10mA max.)
  Dim/DA - Dimming control out. (10mA max.)

OPERATION

To check the operation of the INGY-MOD3MDALI subject to software version:

- Turn on the supply then after 20 seconds if the sensor has recognised movement of a person within its zone of detection the integral red LED on INGY-MOD3MDALI will stay illuminated for 4 seconds before the red LED turns off.
- Thereafter, every time movement is detected by INGY-MOD3MDALI the integral red LED will stay illuminated for 4 seconds.

The control also features adjustable time out (time lag) control and daylight threshold control which are configured by the APP.

PRECAUTIONS

- Do not place the INGY-MOD3MDALI near heat sources, fans or in ventilated ceiling voids.
- Do not place close to, or positioned such that, any light source points directly into the INGY-MOD3MDALI.
- Ensure wires and cables are securely held within the connection terminals.
- The 12Vdc SELV power supply should be protected by a suitable fuse.
- **Disconnect the INGY-MOD3MDALI from the circuit before performing insulation testing of the wiring circuit.**

TECHNICAL DETAILS

INPUT	
Voltage:	12-13Vdc
Max. current:	31mA
Standby current:	21mA
DALI OUTPUT	
Voltage:	11Vdc
Max. current:	10mA
Max. output cable length	10 meters
RADIO TRANSCEIVER	
Operating frequencies:	2.4... 2,483 GHz
Max. output power:	+4 dBm
LUX PARAMETERS	
Range:	5 - 2000 lux
OPERATING CONDITIONS Note: The temperature difference between the detection target and the background must be at least 4 °C.	
Ambient temperature:	-20... +40 °C (Iout 0.05 A)
Storage temperature:	-25... +75 °C
Max. relative humidity:	0... 80%, non cond.
POWER SUPPLY CONNECTORS	
Terminal block Wire size:	0.5mm² - 2.5mm² solid or stranded
Wire strip length:	6-7mm
Tightening torque:	0,4 Nm/4 Kgf.cm
MECHANICAL DATA	
Dimensions:	Control: 25 x 50 x 38mm Bezel: 30 x 56 x 11mm
Weight:	140g (unpacked)
Degree of protection:	IP20
Protection class:	Built-in Class 2
Material (casing)	Flame-retardant polycarbonate
Finish / Colour	Matt /White (RAL 9003)
CONFORMITY AND STANDARDS	
EMC emission: EN 301 489-1 V2.2.0, EN 301 489-17 V3.1.1, EN 55032: 2015, EN61000-3-2: 2014, EN61000-3-3: 2013	
EMC immunity: EN 301 489-1 V2.2.0, EN 301 489-17 V3.1.1	
Environment: Complies with WEEE and RoHS directives	

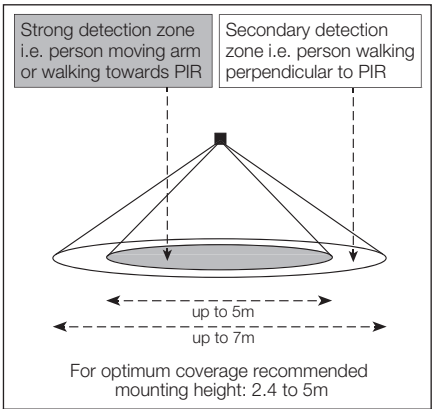

DIAGRAM 1

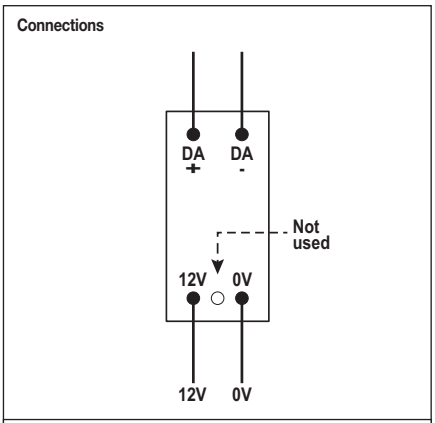

DIAGRAM 2

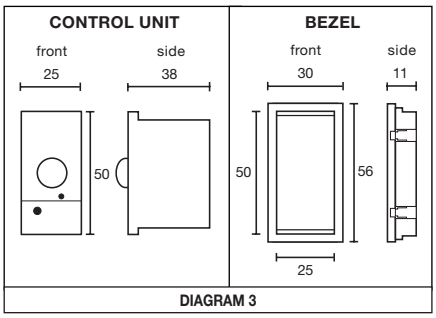

DIAGRAM 3

5 YEAR WARRANTY

INGY-MOD3MDALI comes with a 5 year warranty from the date of manufacture and is CE marked.

DANLERS Limited, Vincients Road, CHIPPENHAM, Wiltshire, SN14 6NQ, UK.
Telephone: +44 (0)1249 443377 Fax: +44 (0)1249 443388 E-mail: sales@danlers.co.uk
www.danlers.co.uk

Company Registered Number 2570169 VAT Registration Number 543 5491 38